NEWSTART®
紐氏達特

Small Planetary Gearbox Catalogue

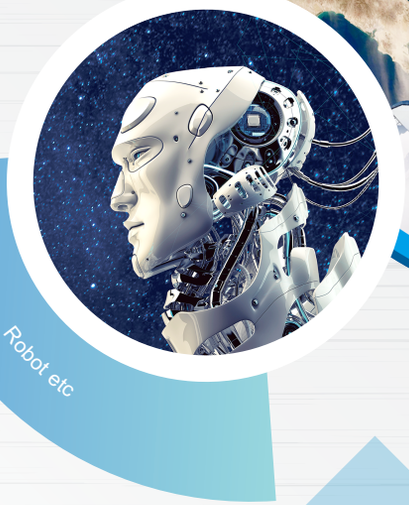

www.newstartgear.com

PRECISION SMALL PLANETARY GEARBOX

GPA 10 ∅ 10mm, MICRO PLANETARY GEARBOX 02

GPA 12 ∅ 12mm, MICRO PLANETARY GEARBOX 03

GPA 13 ∅ 13mm, MICRO PLANETARY GEARBOX 04

GPA 16 ∅ 16mm, MICRO PLANETARY GEARBOX 05

GPX 16 ∅ 16mm, MICRO PLANETARY GEARBOX 06

GPA 22 ∅22mm, MINIATURE PLANETARY GEARBOX 07

GPB 22H ∅ 22mm, MINIATURE PLANETARY GEARBOX 08

GPX 22 ∅ 22mm, MINIATURE PLANETARY GEARBOX 09

GPA 26 ∅ 26mm, MINIATURE PLANETARY GEARBOX 10

GPA 28 ∅ 28mm, MINIATURE PLANETARY GEARBOX 11

GP 28 H ∅ 28mm, MINIATURE PLANETARY GEARBOX 12

GPA 32 ∅ 2mm, SMALL PLANETARY GEARBOX 13

GPB 32 ∅32mm, SMALL PLANETARY GEARBOX 14

GPX 32 ∅ 32mm, SMALL PLANETARY GEARBOX 15

GPA 35 ∅ 35mm, SMALL PLANETARY GEARBOX 16

GPA 42 ∅ 42mm, SMALL PLANETARY GEARBOX 17

GPB 42 ∅ 42mm, SMALL PLANETARY GEARBOX 18

GPA 52 ∅ 52mm, SMALL PLANETARY GEARBOX 19

GPA 10 PLANETARY GEARBOX

GPA10 ∅ 10mm

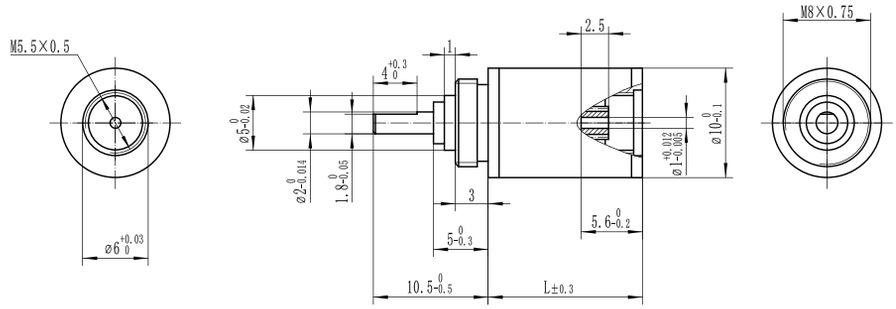

GPA10 RATIO LIST

Stage	1	2	3	4	5
Order No.	1066001	1066002	1066003	1066004	1066005
Reduction ratio	4	16	64	256	1024

MAJOR PARAMETERS

Stages		1	2	3	4	5
Continuous torque	Nm	0.01	0.03	0.1	0.15	0.15
Intermittent torque	Nm	0.02	0.05	0.15	0.2	0.2
Efficiency %		90	81	72	63	55
Average backlash no load ° 1.5		1.8	2.0		2.2	2.5
Length	mm	11	14.1	17.2	20.4	23.5
Weight	g	5.2	7	8.5	9	10

PARAMETERS

Output shaft material	steel
Recommended max. input speed for:	
Max. continuous input speed	12000 rpm
Direction of rotation, drive to output	=
Bearing at output	ball bearing
Shaft load, max.	
Max. radial load, 5 mm from flange	5N
Max. axial load	5N
Max. force for press fits	10N
Shaft play	
Radial play, 5 mm from flange	≤0.1 mm
Axial play	≤0.2 mm
Recommended temperature range	-20°C+100 °C

GPA 12 PLANETARY GEARBOX

GPA12 ∅12mm

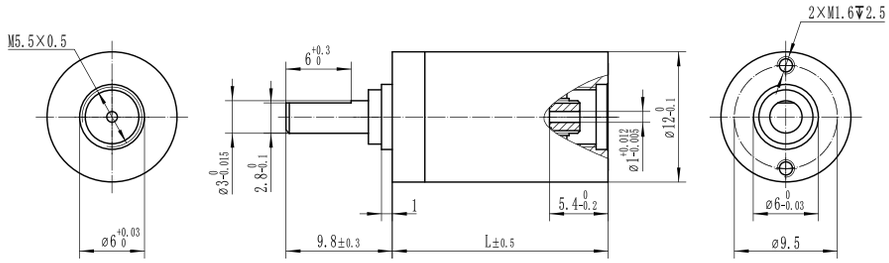

GPA12 RATIO LIST

Stage	1				
Order No.	1266001	1266002	1266003	1266004	
Reduction ratio	3.5	4	4.75	6	
Stage	2				
Order No.	1266005	1266006	1266007	1266008	1266009 —— 012
Reduction ratio	12.3	14	16	16.6	19 —— 36
Stage	3				
Order No.	1266013	1266014	1266015	1266016	1266017 —— 031
Reduction ratio	42.9	49	56	58.2	64 —— 216
Stage	4				
Order No.	1266032	1266033	1266034	1266035	1266036 —— 062
Reduction ratio	150.1	171.5	196	203.7	224 —— 812.3
Stage	5				
Order No.	1266063	1266064	1266065	1266066	1266067 —— 114
Reduction ratio	525.2	600.3	686	712.8	784 —— 4873.5

MAJOR PARAMETERS

Stages		1	2	3	4	5
Continuous torque	Nm	0.2	0.2	0.3	0.3	0.35
Intermittent torque	Nm	0.3	0.3	0.45	0.45	0.5
Efficiency %		90	81	72	63	55
Average backlash no load °	1.5	2.0	2.0		2.2	2.5
Length	mm	14.3	17.1	19.9	22.7	25.5
Weight	g	6.5	9.5	12.5	15.5	19.5

PARAMETERS

Output shaft material	Steel
Recommended max. input speed for:	
Max. continuous input speed	12000 rpm
Direction of rotation, drive to output	=
Bearing at output	Ball bearing
Shaft load, max.	
Max. radial load, 5 mm from flange	8N
Max. axial load	8N
Max. force for press fits	10N
Shaft play	
Radial play, 5 mm from flange	≤0.1 mm
Axial play	≤0.2 mm
Recommended temperature range	-20°C+100 °C

GPA13 PLANETARY GEARBOX

GPA13 ∅13mm

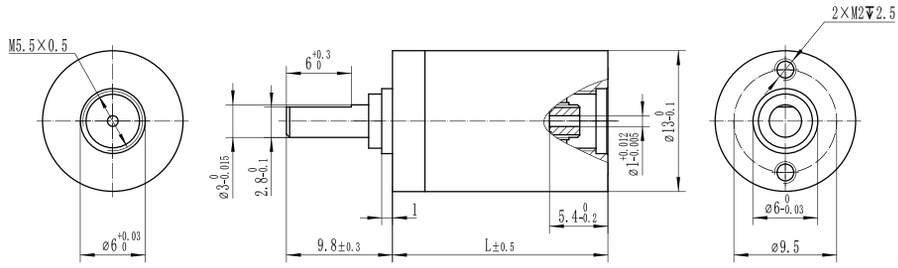

GPA13 RATIO LIST

Stage	1				
Order No.	1366001	1366002	1366003	1366004	
Reduction ratio	3.5	4	4.75	6	
Stage	2				
Order No.	1366005	1366006	1366007	1366008	1366009 —— 012
Reduction ratio	12.3	14	16	16.6	19 —— 36
Stage	3				
Order No.	1366013	1366014	1366015	1366016	1366017 —— 031
Reduction ratio	42.9	49	56	58.2	64 —— 216
Stage	4				
Order No.	1366032	1366033	1366034	1366035	1366036 —— 062
Reduction ratio	150.1	171.5	196	203.7	224 —— 812.3
tage	5				
Order No.	1366063	1366064	1366065	1366066	1366067 —— 114
Reduction ratio	525.2	600.3	686	712.8	784 —— 4873.5

MAJOR PARAMETERS

Stages		1	2	3	4	5
Continuous torque	Nm	0.2	0.2	0.3	0.3	0.35
Intermittent torque	Nm	0.3	0.3	0.45	0.45	0.5
Efficiency %		90	81	72	63	55
Average backlash no load ° 1.5		2.0	2.0		2.2	2.5
Length	mm	14.3	17.1	19.9	22.7	25.5
Weight	g	7	10	13	16	20

PARAMETERS

Output shaft material	Steel
Recommended max. input speed for:	
Max. continuous input speed	12000 rpm
Direction of rotation, drive to output	=
Bearing at output	Ball bearing
Shaft load, max.	
Max. radial load, 5 mm from flange	8N
Max. axial load	8N
Max. force for press fits	10N
Shaft play	
Radial play, 5 mm from flange	≤0.1 mm
Axial play	≤0.2 mm
Recommended temperature range	-20°C+100 °C

GPA 16 PLANETARY GEARBOX

GPA16 ∅16mm

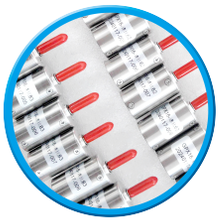

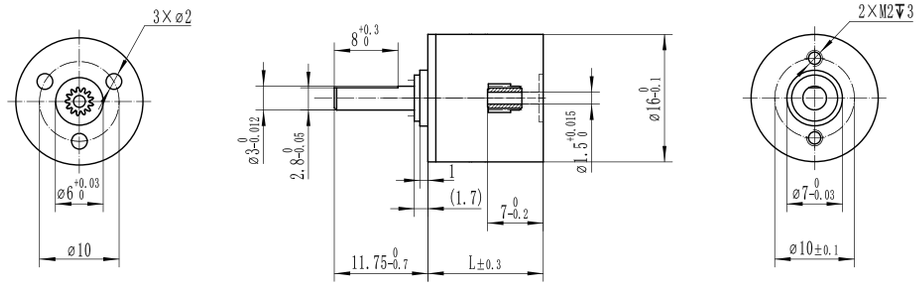

GPA16 RATIO LIST

Stage	1				
Order No.	1666001	1666002	1666003	1666004	
Reduction ratio	3.55	3.95	5.31	6.60	
Stage	2				
Order No.	1666005	1666006	1666007	1666008	1666009 —— 013
Reduction ratio	13	14	16	19	21 —— 44
Stage	3				
Order No.	1666014	1666015	1666016	1666017	1666018 —— 031
Reduction ratio	45	50	55	62	67 —— 287
Stage	4				
Order No.	1666032	1666033	1666034	1666035	1666036 —— 062
Reduction ratio	158	176	196	218	237 —— 1526
Stage	5				
Order No.	1666075	1666076	1666077	1666078	1666079 —— 106
Reduction ratio	1293	1398	1439	1556	1561 —— 6513

MAJOR PARAMETERS

Stages		1	2	3	4	5
Continuous torque	Nm	0.2	0.25	0.35	0.45	
Intermittent torque	Nm	0.3	0.35	0.5	0.6	
Efficiency	%	90	81	72	63	
Average backlash no load	°	1.5	2.0	2.0	2.2	
Length	mm	14.5	18.8	25.2	29.5	
Weight	g	11	17	23.3	30	

PARAMETERS

Output shaft material	Steel
Recommended max. input speed for:	
Max. continuous input speed	12000 rpm
Direction of rotation, drive to output	=
Bearing at output	Ball bearing
Shaft load, max.	
Max. radial load, 5 mm from flange	8N
Max. axial load	8N
Max. force for press fits	10N
Shaft play	
Radial play, 5 mm from flange	≤0.1 mm
Axial play	≤0.2 mm
Recommended temperature range	-20°C+100 °C

GPX 16 PLANETARY GEARBOX

GPX16 ∅16mm

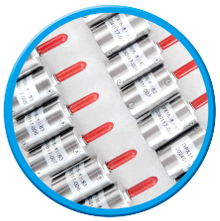

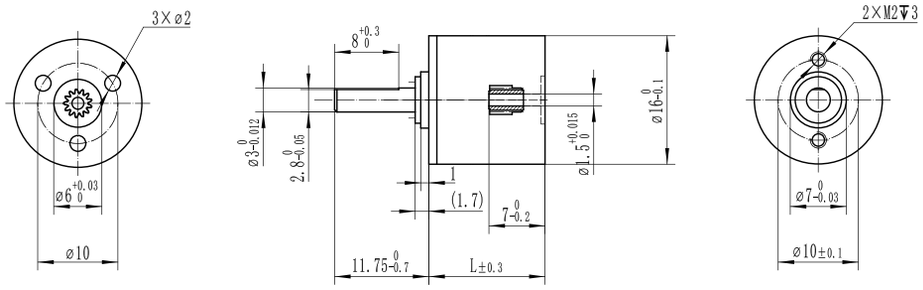

GPX16 RATIO LIST

Stage	1				
Order No.	1668001	1668001	1666003	1666004	
Reduction ratio	3.55	3.95	5.31	6.60	
Stage	2				
Order No.	1666005	1666006	1666007	1666008	1666009 —— 013
Reduction ratio	13	14	16	19	21 —— 44
Stage	3				
Order No.	1666014	1666015	1666016	1666017	1666018 —— 031
Reduction ratio	45	50	55	62	67 —— 287
Stage	4				
Order No.	1666032	1666033	1666034	1666035	1666036 —— 062
Reduction ratio	158	176	196	218	237 —— 1526
Stage	5				
Order No.	1666075	1666076	1666077	1666078	1666079 —— 106
Reduction ratio	1293	1398	1439	1556	1561 —— 6513

MAJOR PARAMETERS

Stages		1	2	3	4	5
Continuous torque	Nm	0.25	0.35	0.5	0.6	
Intermittent torque	Nm	0.35	0.5	0.7	0.8	
Efficiency	%	90	81	72	63	
Average backlash no load	°	1.5	2.0	2.0	2.2	
Length	mm	16.5	20.8	27.2	31.5	
Weight	g	11	17	23.3	30	

PARAMETERS

Output shaft material	Steel
Recommended max. input speed for:	
Max. continuous input speed	12000 rpm
Direction of rotation, drive to output	=
Bearing at output	Ball bearing
Shaft load, max.	
Max. radial load, 5 mm from flange	20N
Max. axial load	20N
Max. force for press fits	30N
Shaft play	
Radial play, 5 mm from flange	≤0.1 mm
Axial play	≤0.2 mm
Recommended temperature range	-20°C+100 °C

GPA 22 PLANETARY GEARBOX

GPA22 ∅22mm

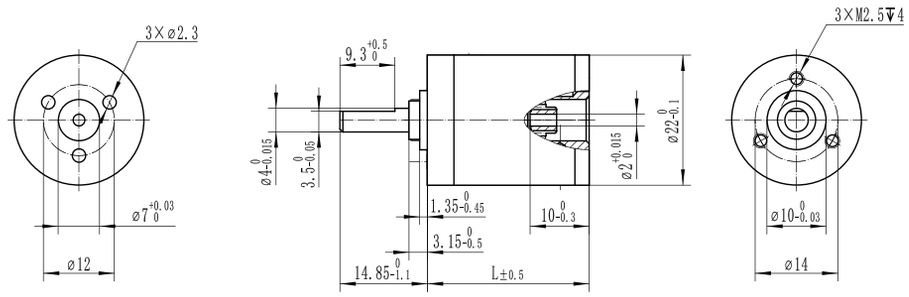

GPA22 RATIO LIST

Stage	1				
Order No.	2266001	2266002	2266003	2266004	2266005
Reduction ratio	3.30	3.71	4.29	5.18	6.75
Stage	2				
Order No.	2266006	2266007	2266008	2266010	2266011 —— 020
Reduction ratio	11	12	14	16	17 —— 46
Stage	3				
Order No.	2266022	2266023	2266024	2266025	2266026 —— 054
Reduction ratio	40	45	47	51	52 —— 236
Stage	4				
Order No.	2266058	2266059	2266060	2266061	2266062 —— 123
Reduction ratio	150	154	168	173	186 —— 1318
Stage	5				
Order No.	2266129	2266130	2266131	2266132	2266133 —— 248
Reduction ratio	508	554	571	615	622 —— 8258

MAJOR PARAMETERS

Stages		1	2	3	4	5
Continuous torque	Nm	0.5	0.6	1.2	1.2	1.5
Intermittent torque	Nm	0.8	0.9	1.8	1.8	2.2
Efficiency	%	90	81	72	63	55
Average backlash no load	°	1.0	1.5	2.0	2.0	2.2
Length	mm	22.9	27.4	34.4	38.9	43.4
Weight	g	27	42	57	72	87

PARAMETERS

Output shaft material	Steel
Recommended max. input speed for:	
Max. continuous input speed	10000 rpm
Direction of rotation, drive to output	=
Bearing at output	Ball bearing
Shaft load, max.	
Max. radial load, 5 mm from flange	50N
Max. axial load	50N
Max. force for press fits	80N
Shaft play	
Radial play, 5 mm from flange	≤0.1 mm
Axial play	≤0.2 mm
Recommended temperature range	-20°C+100 °C

GPB 22H PLANETARY GEARBOX

GPB22H ∅22mm

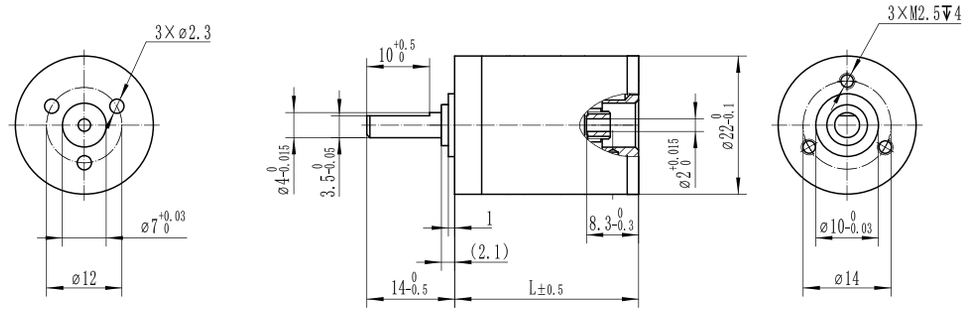

GPB22H RATIO LIST

Stage	1				
Order No.	2267001	2267002	2267003	2267004	
Reduction ratio	3.6	4	4.6	5.5	
Stage	2				
Order No.	2267005	2267006	2267007	2267008	2267009 —— 014
Reduction ratio	12.8	14.3	16.0	16.4	18.4 —— 30.3
Stage	3				
Order No.	2267015	2267016	2267017	2267018	2267019 —— 034
Reduction ratio	45.6	51.0	57.1	58.7	64.0 —— 166.4
Stage	4				
Order No.	2267035	2267036	2267037	2267038	2267039 —— 069
Reduction ratio	162.7	182.2	204.1	209.5	228.6 —— 915.1
Stage	5				
Order No.	2267070	2267071	2267072	2267073	2267074 —— 123
Reduction ratio	581.0	650.8	728.9	748.4	816.3 —— 3660.3

MAJOR PARAMETERS

Stages		1	2	3	4	5
Continuous torque	Nm	0.5	0.5	0.8	1	1
Intermittent torque	Nm	0.8	0.8	1.2	1.5	1.5
Efficiency	%	90	81	72	63	55
Average backlash no load	°	1.0	1.5	2.0	2.0	2.2
Length	mm	19.7	25.5	29.3	33.1	36.9
Weight	g	27	42	57	72	87

PARAMETERS

Output shaft material	Steel
Recommended max. input speed for:	
Max. continuous input speed	10000 rpm
Direction of rotation, drive to output	=
Bearing at output	Ball bearing
Shaft load, max.	
Max. radial load, 5 mm from flange	30N
Max. axial load	30N
Max. force for press fits	80N
Shaft play	
Radial play, 5 mm from flange	≤0.1 mm
Axial play	≤0.2 mm
Recommended temperature range	-20°C+100 °C

GPX 22 PLANETARY GEARBOX

GPX22 ∅22mm

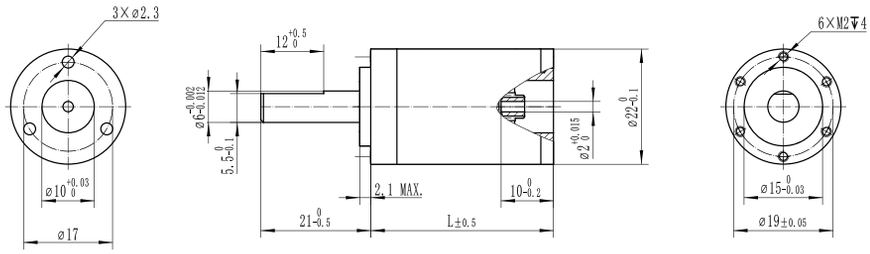

GPX22 RATIO LIST

Stage	1				
Order No.	2268001	2268002	2268003	2268004	2268005
Reduction ratio	3.30	3.71	4.29	5.18	6.75
Stage	2				
Order No.	2268006	2268007	2268008	2268010	2268011 —— 020
Reduction ratio	11	12	14	16	17 —— 46
Stage	3				
Order No.	2268022	2268023	2268024	2268025	2268026 —— 054
Reduction ratio	40	45	47	51	52 —— 236
Stage	4				
Order No.	2268058	2268059	2268060	2268061	2268062 —— 123
Reduction ratio	150	154	168	173	186 ——1318
Stage	5				
Order No.	2268129	2268130	2268131	2268132	2268133 —— 248
Reduction ratio	508	554	571	615	622 —— 8258

MAJOR PARAMETERS

Stages		1	2	3	4	5
Continuous torque	Nm	0.8	1	2	2	2.5
Intermittent torque	Nm	1.2	1.5	3	3	3.5
Efficiency	%	90	81	72	63	55
Average backlash no load	°	1.0	1.5	2.0	2.0	2.2
Length	mm	23.4	27.9	34.9	39.4	43.9
Weight	g	27	42	57	72	87

PARAMETERS

Output shaft material	Steel
Recommended max. input speed for:	
Max. continuous input speed	8000 rpm
Direction of rotation, drive to output	=
Bearing at output	Ball bearing
Shaft load, max.	
Max. radial load, 5 mm from flange	80N
Max. axial load	80N
Max. force for press fits	100N
Shaft play	
Radial play, 5 mm from flange	≤0.1 mm
Axial play	≤0.2 mm
Recommended temperature range	-40°C+100 °C

GPA 26 PLANETARY GEARBOX

GPA26 ∅26mm

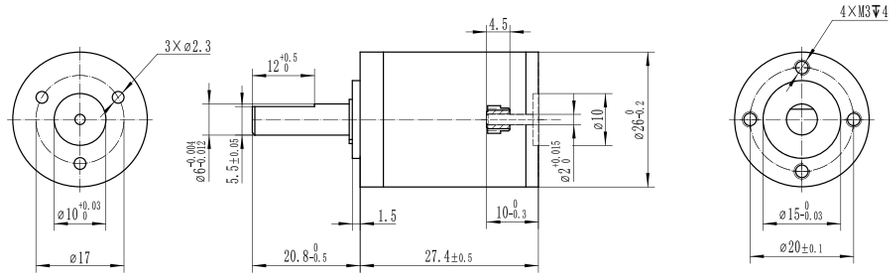

GPA26 RATIO LIST

Stage	1				
Order No.	2666001	2666002	2666003	2666004	2666005
Reduction ratio	3.30	3.71	4.29	5.18	6.75
Stage	2				
Order No.	2666006	2666007	2666008	2666010	2666011 —— 020
Reduction ratio	11	12	14	16	17 —— 46
Stage	3				
Order No.	2666022	2666023	2666024	2666025	2666026 —— 054
Reduction ratio	40	45	47	51	52 —— 236
Stage	4				
Order No.	2666058	2666059	2666060	2666061	2666062 —— 123
Reduction ratio	150	154	168	173	186 ——1318
Stage	5				
Order No.	2666129	2666130	2666131	2666132	2666133 —— 248
Reduction ratio	508	554	571	615	622 —— 8258

MAJOR PARAMETERS

Stages		1	2	3	4	5
Continuous torque	Nm	0.7	0.9	1.5	2	2.5
Intermittent torque	Nm	1.1	1.3	3	3	4
Efficiency	%	90	81	72	63	55
Average backlash no load	°	1.0	1.5	2.0	2.0	2.2
Length	mm	22.9	27.4	34.4	38.9	43.4
Weight	g	47	67	87	107	127

PARAMETERS

Output shaft material	Steel
Recommended max. input speed for:	
Max. continuous input speed	8000 rpm
Direction of rotation, drive to output	=
Bearing at output	Ball bearing
Shaft load, max.	
Max. radial load, 5 mm from flange	80N
Max. axial load	80N
Max. force for press fits	100N
Shaft play	
Radial play, 5 mm from flange	≤0.1 mm
Axial play	≤0.2 mm
Recommended temperature range	-20°C+100 °C

GPA 28 PLANETARY GEARBOX

GPA28 ∅28mm

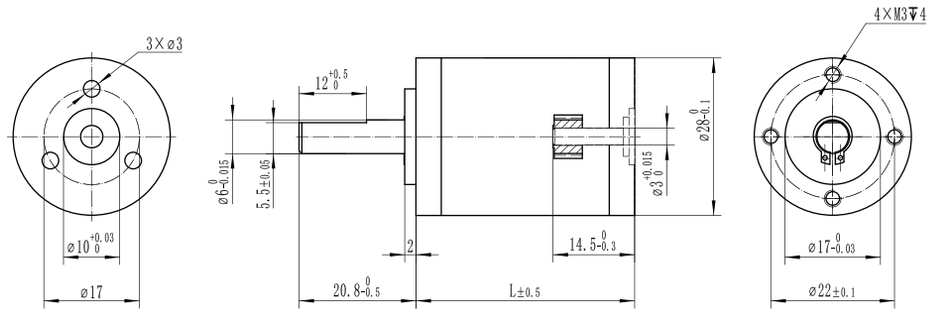

GPA28 RATIO LIST

Stage	1				
Order No.	2866001	2866002	2866003	2866004	2866005
Reduction ratio	3.30	3.71	4.29	5.18	6.75
Stage	2				
Order No.	2866006	2866007	2866008	2866010	2866011 —— 020
Reduction ratio	11	12	14	16	17 —— 46
Stage	3				
Order No.	2866022	2866023	2866024	2866025	2866026 —— 054
Reduction ratio	40	45	47	51	52 —— 236
Stage	4				
Order No.	2866058	2866059	2866060	2866061	2866062 —— 123
Reduction ratio	150	154	168	173	186 ——1318
Stage	5				
Order No.	2866129	2866130	2866131	2866132	2866133 —— 248
Reduction ratio	508	554	571	615	622 ——8258

MAJOR PARAMETERS

Stages		1	2	3	4	5
Continuous torque	Nm	0.8	1.2	1.5	2	2.5
Intermittent torque	Nm	1.2	1.5	2	3	4
Efficiency	%	90	81	72	63	55
Average backlash no load	°	1.0	1.5	2.0	2.0	2.2
Length	mm	27.4	34.4	38.9	43.4	47.9
Weight	g	69	84	109	134	159

PARAMETERS

Output shaft material	Steel
Recommended max. input speed for:	
Max. continuous input speed	8000 rpm
Direction of rotation, drive to output	=
Bearing at output	Ball bearing
Shaft load, max.	
Max. radial load, 5 mm from flange	80N
Max. axial load	80N
Max. force for press fits	100N
Shaft play	
Radial play, 5 mm from flange	≤0.1 mm
Axial play	≤0.2 mm
Recommended temperature range	-20°C+100 °C

GPB 28H PLANETARY GEARBOX

GPB 28 H ∅ 28mm

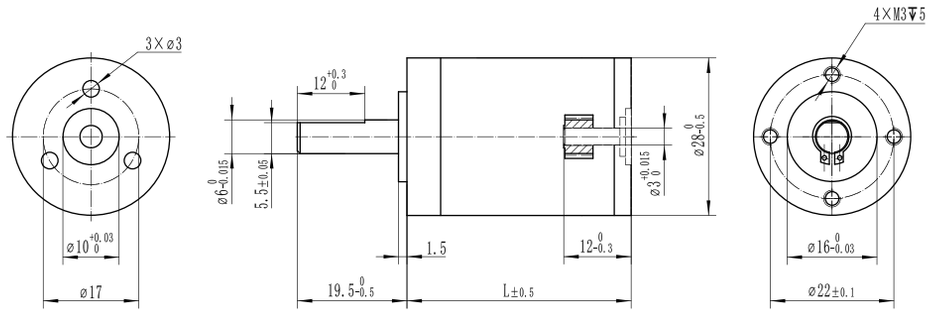

GPB28H RATIO LIST

Stage	1				
Order No.	2867001	2867002	2867003	2867004	2867005
Reduction ratio	3.6	4.0	4.6	5.5	7.0
Stage	2				
Order No.	2867006	2867007	2867008	2867009	2867010 —— 019
Reduction ratio	12.8	14.3	16.0	16.4	18.4 —— 49.0
Stage	3				
Order No.	2867020	2867021	2867022	2867023	2867024 —— 052
Reduction ratio	45.6	51.0	57.1	58.7	64.0 —— 343.0
Stage	4				
Order No.	2867053	2867054	2867055	2867056	2867057 —— 117
Reduction ratio	162.7	182.2	204.1	209.5	228.6 —— 1577.8
Stage	5				
Order No.	2867122	2867123	2867124	2867125	2867126 —— 248
Reduction ratio	728.9	748.4	816.3	838.2	894.8 —— 8152.4

MAJOR PARAMETERS

Stages		1	2	3	4	5
Continuous torque	Nm	1.0	2.0	3.0	4.0	4.5
Intermittent torque	Nm	1.5	3.0	4.5	6.0	6.5
Efficiency	%	90	81	72	63	55
Average backlash no load	°	1.0	1.5	2.0	2.0	2.2
Length	mm	26.8	34.6	39.9	45.2	50.5
Weight	g	69	84	109	134	159

PARAMETERS

Output shaft material	Steel
Recommended max. input speed for:	
Max. continuous input speed	8000 rpm
Direction of rotation, drive to output	=
Bearing at output	Ball bearing
Shaft load, max.	
Max. radial load, 5 mm from flange	80N
Max. axial load	80N
Max. force for press fits	100N
Shaft play	
Radial play, 5 mm from flange	≤0.1 mm
Axial play	≤0.1 mm
Recommended temperature range	-20°C+100 °C

GPA 32 PLANETARY GEARBOX

GPA32 ∅ 32mm

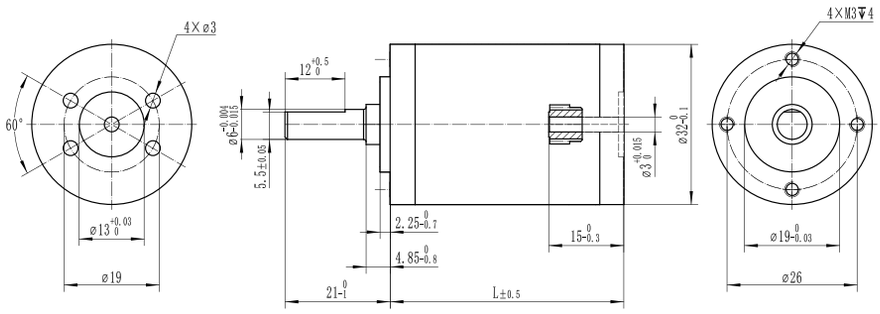

GPA32 RATIO LIST

Stage	1				
Order No.	3266001	3266002	3266003	3266004	3266005
Reduction ratio	3.11	3.71	4.80	5.75	7.33
Stage	2				
Order No.	3266006	3266007	3266008	3266009	3266010 —— 014
Reduction ratio	10	12	14	15	18 —— 33
Stage	3				
Order No.	3266015	3266016	3266017	3266018	3266019 —— 032
Reduction ratio	30	36	43	46	51 —— 190
Stage	4				
Order No.	3266033	3266034	3266035	3266036	3266037 —— 063
Reduction ratio	94	112	134	145	159 —— 913
Stage	5				
Order No.	3266067	3266068	3266069	3266070	3266071 —— 114
Reduction ratio	415	450	496	537	592 —— 4380

MAJOR PARAMETERS

Stages		1	2	3	4	5
Continuous torque	Nm	1.2	2.5	4.5	6.0	6.0
Intermittent torque	Nm	1.8	3.5	6.5	7.5	7.5
Efficiency	%	90	81	72	63	55
Average backlash no load	°	1.0	1.2	1.5	1.5	1.8
Length	mm	30.5	40	46.7	53.4	60.1
Weight	g	110.6	147.6	177.6	207.6	237.6

PARAMETERS

Output shaft material	Steel
Recommended max. input speed for:	
Max. continuous input speed	8000 rpm
Direction of rotation, drive to output	=
Bearing at output	Ball bearing
Shaft load, max.	
Max. radial load, 5 mm from flange	120N
Max. axial load	120N
Max. force for press fits	120N
Shaft play	
Radial play, 5 mm from flange	≤0.1 mm
Axial play	≤0.1 mm
Recommended temperature range	-20°C+100 °C

GPB 32 PLANETARY GEARBOX

GPB32 ∅ 32mm

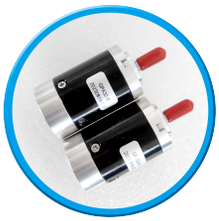

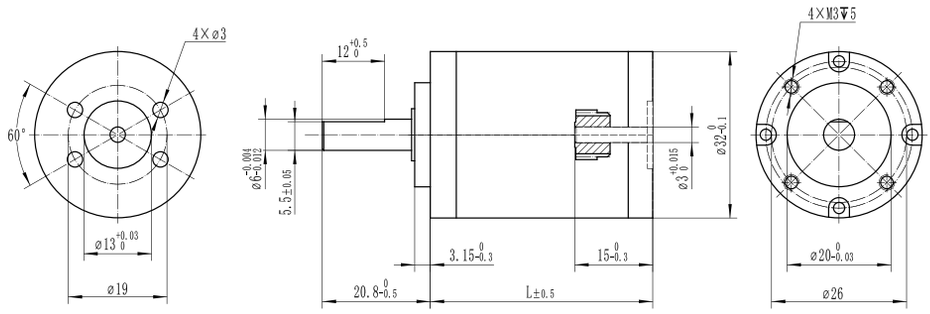

GPB32 RATIO LIST

Stage	1				
Order No.	3267001	3267002	3267003	3267004	
Reduction ratio	3.30	3.71	5.18	6.75	
Stage	2				
Order No.	3267005	3267006	3267007	3267008	3267009 —— 014
Reduction ratio	11	12	14	17	19 —— 46
Stage	3				
Order No.	3267015	3267016	3267017	3267018	3267019 —— 031
Reduction ratio	36	40	45	51	56 —— 236
Stage	4				
Order No.	3267034	3267035	3267036	3267037	3267038 —— 062
Reduction ratio	133	150	168	186	189 —— 1223
Stage	5				
Order No.	3267068	3267069	3267070	3267071	3267072 —— 114
Reduction ratio	554	615	622	690	699 —— 8258

MAJOR PARAMETERS

Stages		1	2	3	4	5
Continuous torque	Nm	1.2	2.0	3.75	4.5	4.5
Intermittent torque	Nm	1.8	3.0	5.0	6.5	6.5
Efficiency	%	90	81	72	63	55
Average backlash no load	°	1.0	1.5	2.0	2.0	2.2
Length	mm	27	35.8	42.8	49.6	56.4
Weight	g	110.6	147.6	177.6	207.6	237.6

PARAMETERS

Output shaft material	Steel
Recommended max. input speed for:	
Max. continuous input speed	8000 rpm
Direction of rotation, drive to output	=
Bearing at output	Ball bearing
Shaft load, max.	
Max. radial load, 5 mm from flange	120N
Max. axial load	120N
Max. force for press fits	120N
Shaft play	
Radial play, 5 mm from flange	≤0.1 mm
Axial play	≤0.2 mm
Recommended temperature range	-20°C+100 °C

GPX 32 PLANETARY GEARBOX

GPX32 ∅ 32mm

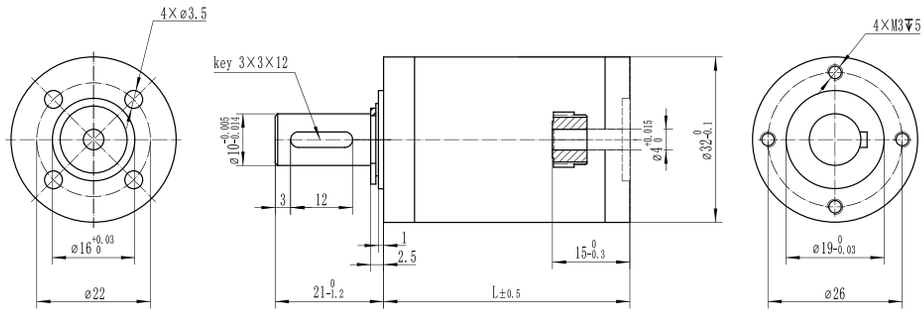

GPX32 RATIO LIST

Stage	1				
Order No.	3268001	3268002	3268003	3268004	3268005
Reduction ratio	3.11	3.71	4.80	5.75	7.33
Stage	2				
Order No.	3268006	3268007	3268008	3268009	3268010 —— 014
Reduction ratio	10	12	14	15	18 —— 33
Stage	3				
Order No.	3268015	3268016	3268017	3268018	3268019 —— 031
Reduction ratio	30	36	43	46	51 —— 159
Stage	4				
Order No.	3268033	3268034	3268035	3268036	3268037 —— 063
Reduction ratio	94	112	134	145	159 —— 913
Stage	5				
Order No.	3268067	3268068	3268069	3268070	3268071 —— 114
Reduction ratio	415	450	496	537	592 —— 4380

MAJOR PARAMETERS

Stages		1	2	3	4	5
Continuous torque	Nm	2.0	4.0	8	8	8
Intermittent torque	Nm	3.0	6.0	12	12	12
Efficiency	%	90	81	72	63	55
Average backlash no load	°	0.8	1.0	1.0	1.5	1.5
Length	mm	31.5	41	47.7	54.4	61.1
Weight	g	110.6	147.6	177.6	207.6	237.6

PARAMETERS

Output shaft material	Steel
Recommended max. input speed for:	
Max. continuous input speed	8000 rpm
Direction of rotation, drive to output	=
Bearing at output	Ball bearing
Shaft load, max.	
Max. radial load, 5 mm from flange	200N
Max. axial load	120N
Max. force for press fits	200N
Shaft play	
Radial play, 5 mm from flange	≤0.1 mm
Axial play	≤0.1 mm
Recommended temperature range	-40°C+100 °C

GPA 35 PLANETARY GEARBOX

GPA35 ∅35mm

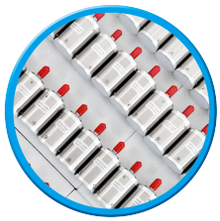

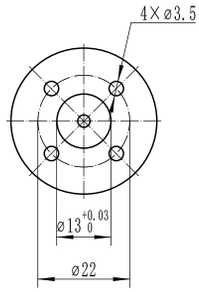

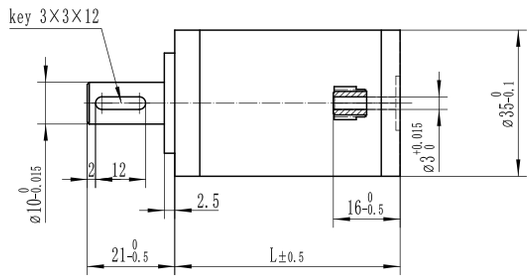

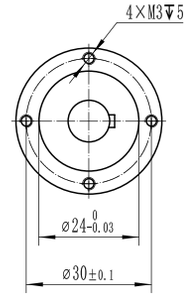

GPA35 RATIO LIST

Stage	1				
Order No.	3566001	3566002	3566003	3566004	
Reduction ratio	3.33	3.95	5.31	6.60	
Stage	2				
Order No.	3566007	3566008	3566009	3566010	3566011 —— 016
Reduction ratio	11	13	16	18	21 ——44
Stage	3				
Order No.	3566018	3566019	3566020	3566021	3566022 —— 035
Reduction ratio	44	52	59	62	70 —— 231
Stage	4				
Order No.	3566039	3566040	3566041	3566042	3566043 —— 070
Reduction ratio	173	197	205	233	243 —— 1526
Stage	5				
Order No.	3566074	3566076	3566077	3566078	3566080 —— 125
Reduction ratio	577	683	776	809	919 —— 8099

MAJOR PARAMETERS

Stages		1	2	3	4	5
Continuous torque	Nm	2.0	5.0	8.0	12	12
Intermittent torque	Nm	3.0	7.5	12	16	16
Efficiency	%	90	81	72	63	55
Average backlash no load	°	0.8	1.2	1.5	2.0	2.0
Length	mm	33	46	54	62	70
Weight	g	166	206	252	295	330

PARAMETERS

Output shaft material	Steel
Recommended max. input speed for:	
Max. continuous input speed	8000 rpm
Direction of rotation, drive to output	=
Bearing at output	滚珠轴承 Ball bearing
Shaft load, max.	
Max. radial load, 5 mm from flange	220N
Max. axial load	150N
Max. force for press fits	300N
Shaft play	
Radial play, 5 mm from flange	≤0.1 mm
Axial play	≤0.1 mm
Recommended temperature range	-20°C+100 °C

GPA 42 PLANETARY GEARBOX

GPA 42 ∅42mm

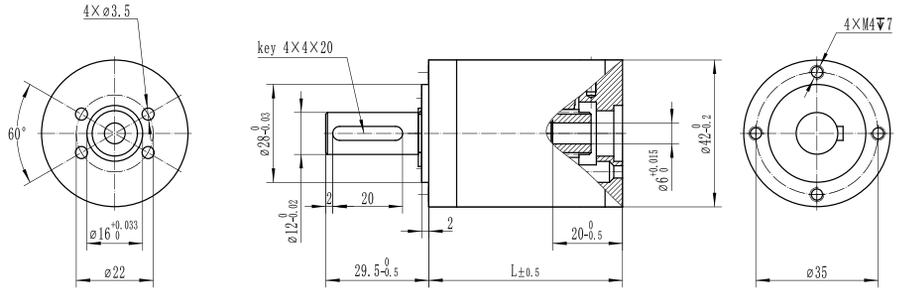

GPA42 RATIO LIST

Stage	1				
Order No.	4266001	4266002	4266003	4266004	4266005
Reduction ratio	3.50	4.00	4.33	5.00	6.00
Stage	2				
Order No.	4266007	4266008	4266009	4266010	4266011 —— 021
Reduction ratio	12	14	15	16	17 —— 36
Stage	3				
Order No.	4266022	4266023	4266024	4266025	4266026 —— 056
Reduction ratio	43	49	53	56	61 —— 216
Stage	4				
Order No.	4266058	4266059	4266060	4266061	4266062 —— 125
Reduction ratio	172	186	196	212	214 —— 1080
Stage	5				
Order No.	4266128	4266129	4266130	4266131	4266132 —— 251
Reduction ratio	600	650	686	743	750 —— 6480

MAJOR PARAMETERS

Stages		1	2	3	4	5
Continuous torque	Nm	3	7	12	15	15
Intermittent torque	Nm	5	10	20	22.5	22.5
Efficiency	%	90	81	72	63	55
Average backlash no load	°	0.8	1.2	1.5	1.8	1.8
Length	mm	41	55.5	66.6	77.7	87.7
Weight	g	266	365	411	510	609

PARAMETERS

Output shaft material	钢 Steel
Recommended max. input speed for:	
Max. continuous input speed	8000 rpm
Direction of rotation, drive to output	=
Bearing at output	Ball bearing
Shaft load, max.	
Max. radial load, 5 mm from flange	220N
Max. axial load	150N
Max. force for press fits	300N
Shaft play	
Radial play, 5 mm from flange	≤0.1 mm
Axial play	≤0.2 mm
Recommended temperature range	-40°C+100 °C

GPY 42 PLANETARY GEARBOX

GPY 42 ∅42mm

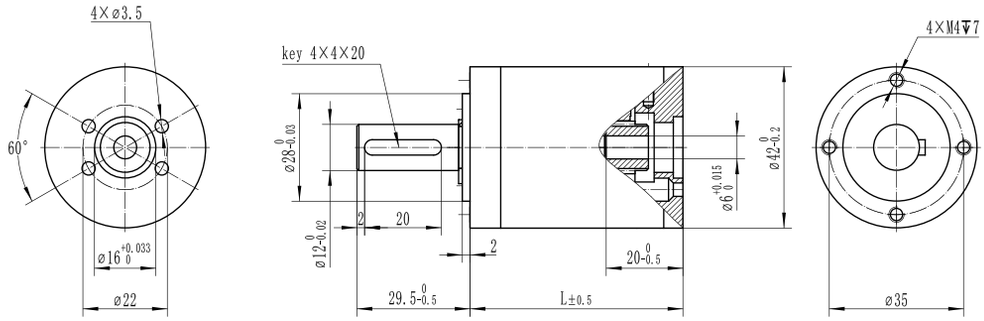

GPY42 RATIO LIST

Stage	1				
Order No.	4269001	4269002	4269003	4269004	4269005
Reduction ratio	3.50	4.00	4.33	5.00	6.00
Stage	2				
Order No.	4269007	4269008	4269009	4269010	4269011 —— 021
Reduction ratio	12	14	15	16	17 —— 36
Stage	3				
Order No.	4269022	4269023	4269024	4269025	4269026 —— 056
Reduction ratio	43	49	53	56	61 —— 216
Stage	4				
Order No.	4269058	4269059	4269060	4269061	4269062 —— 125
Reduction ratio	172	186	196	212	214 —— 1080
Stage	5				
Order No.	4269128	4269129	4269130	4269131	4269132 —— 251
Reduction ratio	600	650	686	743	750 —— 6480

MAJOR PARAMETERS

Stages		1	2	3	4	5
Continuous torque	Nm	3	8	15	15	15
Intermittent torque	Nm	5	12	22.5	22.5	22.5
Efficiency	%	90	81	72	63	55
Average backlash no load	°	0.25	0.35	0.5	0.7	0.8
Length	mm	41	55.5	66.6	77.7	87.7
Weight	g	266	365	411	510	609

PARAMETERS

Output shaft material	Steel
Recommended max. input speed for:	
Max. continuous input speed	8000 rpm
Direction of rotation, drive to output	=
Bearing at output	滚珠轴承 Ball bearing
Shaft load, max.	
Max. radial load, 5 mm from flange	240N
Max. axial load	200N
Max. force for press fits	300N
Shaft play	
Radial play, 5 mm from flange	≤0.1 mm
Axial play	≤0.1 mm
Recommended temperature range	-40°C+100 °C

GPX 52 PLANETARY GEARBOX

GPX 52 ∅42mm

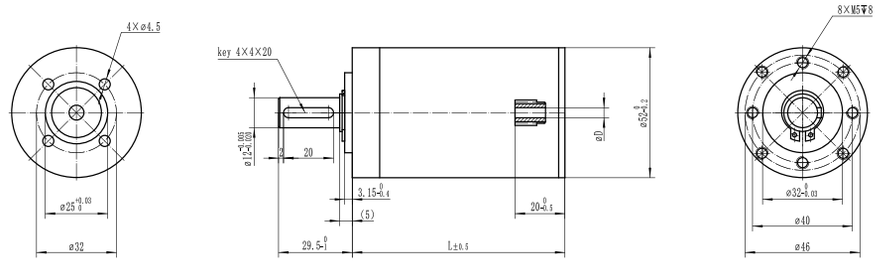

GPX52 RATIO LIST

Stage	1				
Order No.	5268001	5268002	5268003	5268004	
Reduction ratio	3.50	4.33	6.00	7.67	
Stage	2				
Order No.	5268007	5268008	5268009	5268010	5268011 —— 016
Reduction ratio	12	15	19	21	26 —— 59
Stage	3				
Order No.	5268017	5268018	5268019	5268020	5268021 —— 032
Reduction ratio	43	53	66	74	81 —— 216
Stage	4				
Order No.	5268037	5268038	5268039	5268040	5268041 —— 065
Reduction ratio	150	186	230	257	285 —— 1528
Stage	5				
Order No.	3566074	3566076	3566077	3566078	3566080 —— 125
Reduction ratio	577	683	776	809	919 —— 8099

MAJOR PARAMETERS

Stages		1	2	3	4
Continuous torque	Nm	4.0	12	30	30
Intermittent torque	Nm	6.0	18	45	45
Efficiency	%	90	81	72	63
Average backlash no load	°	0.8	1.2	1.5	2.0
Length	mm	45.5	57.7	72.9	85.2
Weight	g	394	551	720	865

PARAMETERS

Output shaft material	Steel
Recommended max. input speed for:	
Max. continuous input speed	8000 rpm
Direction of rotation, drive to output	=
Bearing at output	Ball bearing
Shaft load, max.	
Max. radial load, 5 mm from flange	360N
Max. axial load	200N
Max. force for press fits	500N
Shaft play	
Radial play, 5 mm from flange	≤0.1 mm
Axial play	≤0.1 mm
Recommended temperature range	-40°C+100 °C

PRECISION PLANETARY GEARHEAD

NEWSTART®
紐氏達特

: +86 13428997728
: www.newstartgear.com
: info@newstartgear.com
: Advanced Manufacture Industry Zone, Zibo Huabei Road, No.5888 , ShangDong China